INF1006 Computer Networks

Project Briefing

Project Overview

- Team project (comprising 4-6 team members, consistent with the assignment team)
- Constitutes 30 marks of the total module assessment
- Development of a network application utilizing computer network knowledge
- Three components:
  - **Project proposal (5 marks)**
  - **Demonstration and network diagram exposition (15 marks)**
  - **Poster and video (10 marks)**

Project Objective

- **Enable Practical Application of Network Knowledge**: Provide students with hands-on experience in creating solutions for device communication through practical network applications.
- **Address Real-World Challenges**: Engage students in configuring network architecture, connecting devices, and ensuring seamless communication to overcome real-world challenges.
- **Promote Teamwork Dynamics**: Enhance understanding of teamwork by exposing students to various potential issues related to effective collaboration.

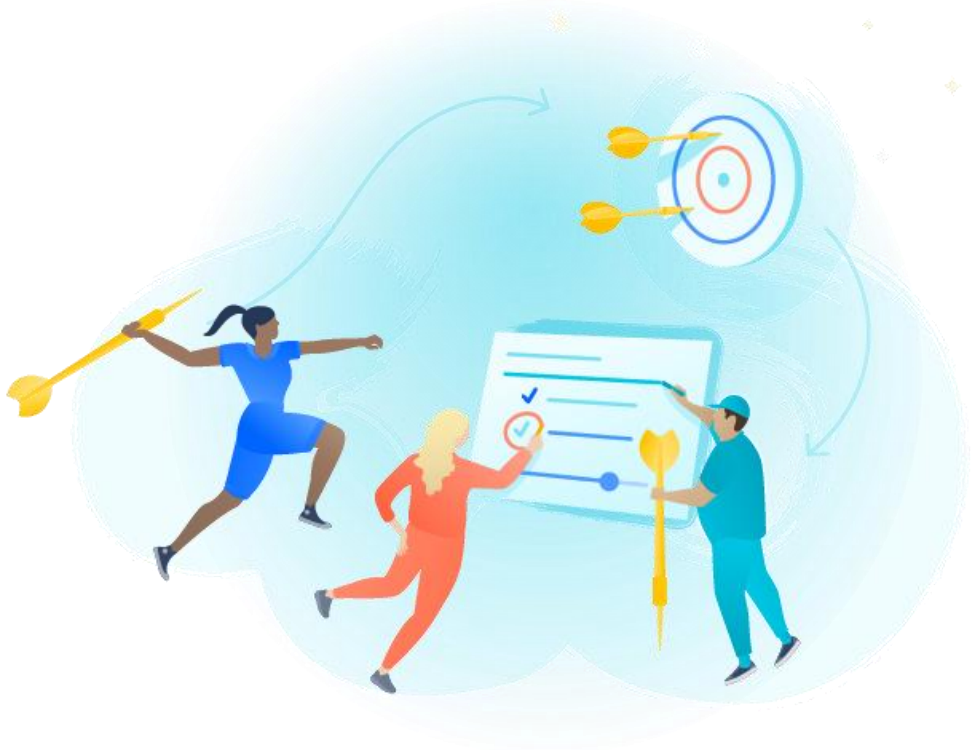

Rules and Regulations

- This project requires teams of 4–6 students to design, implement, and test an application.
- The implementation must include 2-3 Raspberry Pis connected via wired or wireless LAN (no serial communication)
- The Raspberry Pis must communicate with each other through the program developed by the team.
- The sensors or devices used in the project MUST be selected from the provided sensor/device list unless prior approval is obtained from the instructor
- For the designated topics, a recommended set of sensors will be provided. Teams proposing their own project topic must clearly specify the required sensors/devices, selected from the provided sensor/device list

Project Topics

- Teams can choose to implement any **(but not limited to)** of the following topics:
  1. Environmental Monitoring
  2. Smart Agriculture
  3. Home Automation / Smart Lighting
  4. Smart Metering
  5. Smart Waste Bin

What to Submit: Part I

- Project Proposal

  - Teams are required to submit a **one-page** project proposal, which includes the students' names, student IDs, selected project title, abstract and expected goal, project plan (e.g., timeline, **sensor/device information**, and resources), and workload distribution

  - The proposal should be submitted by the team leader to xSite Dropbox by **Friday, 13th February 2026 23:59:59 (Firm)**

What to Submit: Part II

- Final Product and Network Diagram:
  - The final completed application, which must include your source code and any other files that are required to run the application
  - The team should draw the network diagram using Cisco Packet Tracer to illustrate the network topology
- Poster and 3-minute video:
  - The poster should include the network diagram captured from Cisco Packet Tracer
  - The video should concentrate on the network configuration, how the application works and demonstrate all features of the application

The team leader must submit the network diagram, poster, the short video, and ONE zip file containing the complete application files to xSite Dropbox by **Thursday, 26th March 2026 23:59:59 (Firm)**

IoT Devices in Cisco Packet Tracer

- Use any PC or any appropriate device in Cisco Packet Tracer to replicate the Raspberry Pi device (if applicable) . You will explore more on this in Lab 8.

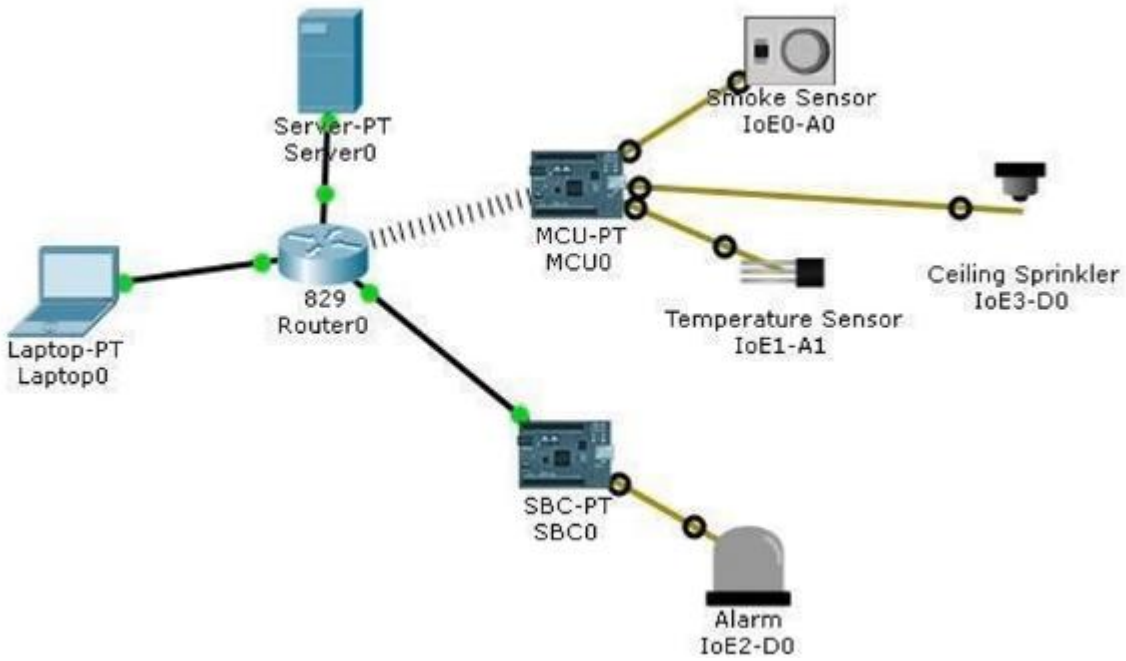

Illustration of IoT devices in Cisco Packet Tracer

Final Demonstration

- A demo session will be arranged on **Week 12 (Friday 27th March 2026)** during lab classes
- The team should first illustrate and explain the network diagram, followed by a demonstration of the proposed network application functions
- During the demonstration, the assessment team, comprising Faculty, PO members, and TAs will ask questions
- Further details regarding the demonstration schedule will be provided at a later date

Teamwork and Peer Assessment

- The final mark for each team member is determined by both the team project mark (awarded to the entire team) and the peer assessment (which may vary based on individual peer reviews within the team)
- Each member of the team is asked to provide the peer assessment of each member of their team (including themselves), in terms of the quality of work and effort expended on the project
- The online peer assessment system TeamMates (https://teammatesv4.appspot.com) will be used in this module
- The details will be shared at a later date

Marking Scheme

Criteria	Marks
Project proposal: • The topic and abstract of the project. • Project goals, outcomes, and scope. • The project plan. • <u>Sensors/devices to be used in this project.</u>	5
Application demonstration and network diagram exposition: • Implementation of all proposed application features. • The Cisco Packet Tracer network diagram should clearly illustrate device communication topology.	15
Poster and Video: • Able to provide thorough overview and features of the use case. • Able to show how the networking applied in their application. • Easy to follow and understand.	10
Peer review	As described on peer assessment

How to Get A?

- Two video samples from previous batch projects, both earning an A grade, have been shared on xSite. You can use them as the reference
- The project assessment rubrics have been posted on xSite for your reference too.

NO Expensive Sensors/Devices

- **The project assessments will NOT factor in the use of advanced/expensive/new sensors or devices purchased for this project.**
- A pool of commonly used sensors is available for loans. Details about borrowing procedures and available equipment will be shared on xSite.
- Please ensure that only the available sensors are used. We do not recommend purchasing additional sensors or devices, as they cannot be claimed or reimbursed by this module.
- <u>One single type of sensor can already be applied across various applications/use cases, meaning you don't need to purchase new/expensive sensors to develop an "innovative" application.</u>
- The list of sensors/devices to be used in the project <u>MUST be included in the proposal</u>.

Expensive ≠ Innovative

Late Submission

- A penalty of **20% per day** of this project marks (including Sunday and public holiday) will be imposed for late submission unless extension has been granted by the instructor prior to the submission date.
- Request for extension will be granted on a case-by-case basis. Any work submitted more than 4 days after the submission date will not be accepted and no mark will be awarded.

Notes on Plagiarism

- The University's policy on copying does not allow you to copy software as well as your assessment solutions from another person
- Copying of another person's work is **unacceptable**
- It is the responsibility of all students that their assessment solutions are their own work
- You must also ensure that others do not obtain access to your solutions for copying a part of them
- Once plagiarism is detected, all assessments involved will receive **ZERO mark**

The Usage of AI Tools

- You may use AI programs e.g., ChatGPT to help generate ideas and brainstorm. However, you should note that the material generated by these programs may be **inaccurate, incomplete, or otherwise problematic**. Beware that use may also stifle your own independent thinking and creativity.
- You may **not submit** any work generated by an AI program as your own. If you include **material/code** generated by an AI program, it must be **cited like any other reference material** (with due consideration for the quality of the reference, which may be poor). It is the responsibility of all students that their assessment solutions are their own work
- Any plagiarism or other form of cheating will be dealt with severely under relevant SIT policies
- SIT GenAI Guidelines can be found here: https://libguides.singaporetech.edu.sg/citation/aichatbot#s-lg-box-23111596

Relevant Files on xSite

- The following files on the team project have been posted on xSite (Under Content-> Project). Please read these files for details.
  - Project briefing slides
  - Detailed project information file
  - Project assessment rubrics
  - Two A-grade videos from AY24
  - Poster template
  - Sensor/device list
  - IoT application examples and recommended sensors

Questions?

lou.xin@singaporetech.edu.sg